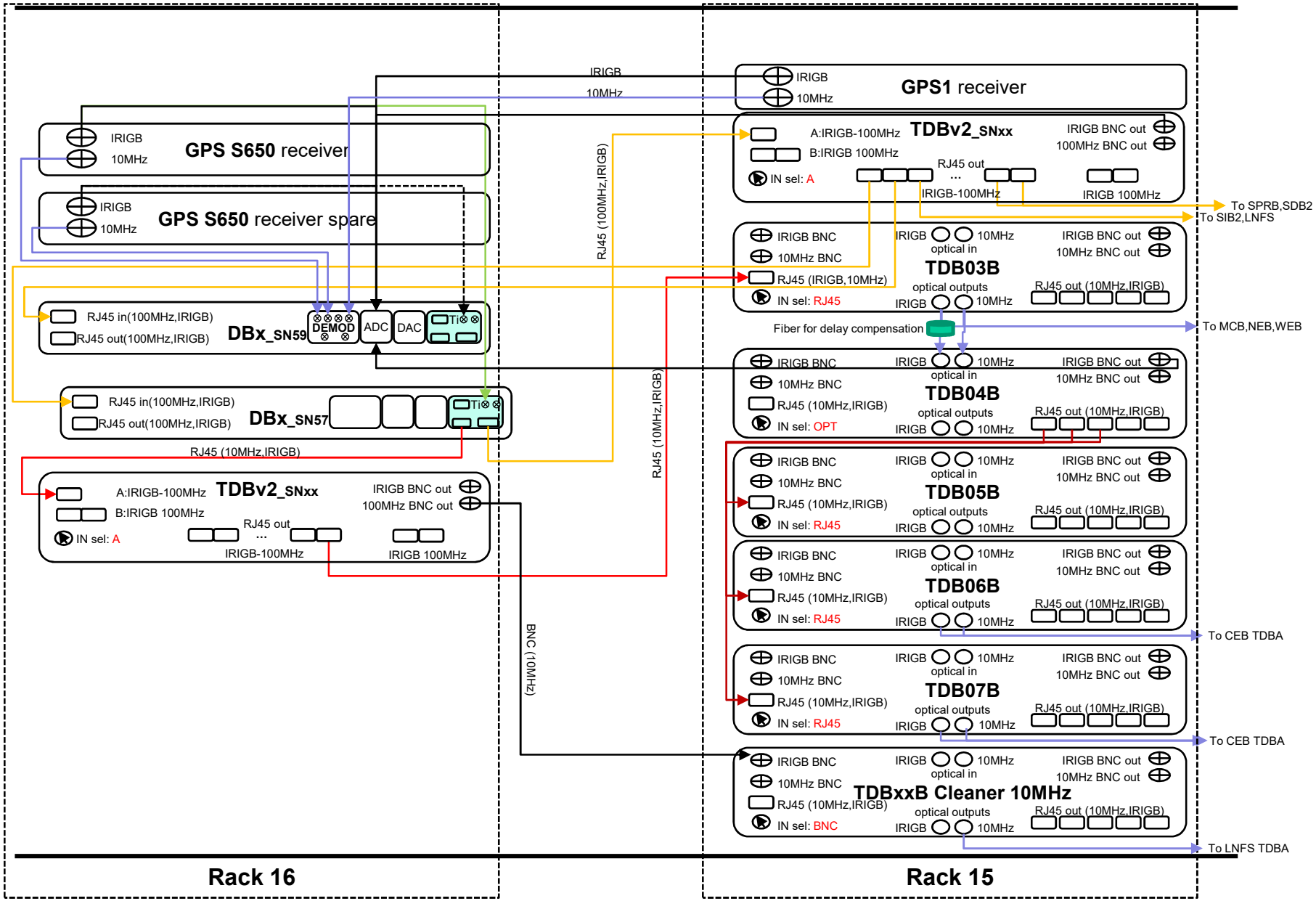Timing Rack – 201902xx – step2